MINISTRY OF TRANSPORT

RAILWAY ACCIDENT

Report on the Derailment that occurred on 22nd May 1967 near Tyseley Station, Birmingham

IN THE
LONDON MIDLAND REGION
BRITISH RAILWAYS

LONDON: HER MAJESTY'S STATIONERY OFFICE
1968

MINISTRY OF TRANSPORT,
ST. CHRISTOPHER HOUSE,
SOUTHWARK STREET,
LONDON, S.E.1.

15*th December*, 1967.

SIR,

I have the honour to report for the information of the Minister of Transport, in accordance with the Order dated 24th May 1967, the result of my Inquiry into the derailment of an express passenger train that occurred at 14.40 on Monday 22nd May 1967, near Tyseley Station, Birmingham, in the London Midland Region of British Railways.

In clear but dull weather, the 09.40 express passenger train from Poole to Newcastle, comprising 12 bogie coaches and hauled by a Type 4 diesel-electric locomotive, was approaching Tyseley North Signalbox under clear signals on the Down Main line at 60–65 m.p.h., when the bracket on the locomotive, supporting part of the A.W.S. equipment, which was of the ramp operated type used by the former Great Western Railway, became detached and struck the stretcher bars and facing point lock equipment at a facing connection, forcing open the closed switch rail, with the result that the rear bogie of the locomotive and all 12 coaches became completely derailed. The driver immediately made an emergency application of the brake and the coaches came to rest after travelling some 300 yards beyond the facing connection, while the locomotive became detached from the train and stopped approximately 70 yards beyond the leading coach.

At this time, a diesel multiple-unit passenger train was approaching Tyseley on the Up Relief line, but the driver, on seeing the derailment occurring about ½ mile ahead, immediately made an emergency brake application and brought his train to a stand some 100 yards from the head of the derailed train.

The damage from the derailment was considerable. The coaches stopped straddled across the Down Main line in zig-zag fashion, blocking the running lines on each side, and with the fourth coach on its side; most of the casualties were in this coach, but fortunately there were no fatalities or serious injuries, and of the 12 passengers requiring hospital treatment for shock and minor injuries, 7 were discharged the same day, 3 the following day, and one later the same week. One passenger was still in hospital at the time of my Inquiry, owing to heart trouble aggravated by the accident, but his condition was stated to be satisfactory. The Birmingham Ambulance and Fire Services answered the emergency call promptly. The first fire appliance was on the scene within five minutes of being advised of the accident at 14.44, while no less than seven ambulances arrived within ten minutes, with the result that all injured passengers requiring hospital treatment were away from the site by 15.19. A number of slightly injured passengers were treated on the spot and then, together with all the uninjured passengers, made their way to Tyseley Station, from where a special train conveyed them to Birmingham, New Street Station, to enable them to continue their journeys on other trains.

The permanent way and signalling equipment were severely damaged, and the Up Main and Up Relief lines were blocked until the afternoon of 23rd May, while the Down Main line was not re-opened to traffic until 14.55 on 24th May. The Down Relief line was also closed to normal traffic until the afternoon of 23rd May to enable it to be used by the breakdown cranes during rerailing operations. During the period of the blockage all trains were initially rerouted via the Goods lines, but these also were required for rerailing operations from 17.30 on 22nd May, and subsequently local trains were routed via the Up and Down Carriage lines, while through trains were rerouted via Leamington and Berkswell.

DESCRIPTION

The Site

1. Tyseley North Signalbox is about ¼ mile on the Birmingham side of Tyseley Station, which is 107¼ miles from Paddington and 4 miles from Birmingham New Street on the former Great Western Railway London–Birmingham Main line. Figure 1 at the back of this Report shows the layout of the lines, which run from south-east to north-west and, in the area of the derailment, comprise, from east to west, the Up Main, Down Main, Up Relief, Down Relief, Up Goods, and Down Goods lines. There are also Up and Down Through Carriage lines adjacent to the Down Goods line, and they extend from south of Tyseley Station to Small Heath South Signalbox, which is about ¾ mile on the Birmingham side of Tyseley Station.

2. There is a slight falling gradient from Tyseley Station to Small Heath South Signalbox. Immediately on the Tyseley Station side of the Tyseley North Signalbox there is a facing connection Down Main to Down Relief and a trailing connection Up Main to Up Relief.

The Signalling

3. The Main and Relief lines in the area are worked on the Absolute Block System with ex-Great Western Railway block instruments and are fitted with W.R. A.W.S. equipment; the signalboxes to the north-west and south-east of Tyseley North are Small Heath South and Tyseley South respectively. The points are all operated mechanically and all signals are of the semaphore variety, mainly lower quadrant. Tyseley North Signalbox was permanently closed on 9th January 1966, all the point connections being secured for normal through working and signals left in the "off" position, with the exception of the Up Distant signals which were maintained at Caution.

4. Down Main facing points No. 13, where the derailment occurred, and facing point lock No. 12, comprise an ex-G.W.R. facing point layout in which the facing point lock plunger in the stretcher bar is connected via a rocking shaft to a mechanical lifting bar and then to the operating level in the signal box. The facing point lock plunger and both switch blades are mechanically detected in the correct position by the relevant signals. The whole facing point lock assembly is protected by a mild steel cover plate with short sloping ramps at each end. The W.R. A.W.S. ramp for Small Heath South Down Main Outer Distant signal is located immediately on the approach side of the facing point lock assembly.

The train

5. The Poole–Newcastle express train was hauled by Brush-Sulzer Type 4 Co-Co diesel-electric locomotive No. D.1714, of 2,750 h.p. and weighing 114½ tons. The train consisted of 12 bogie vehicles of British Railways standard design, fitted with buck-eye couplings and Pullman type gangways. The combined brake power of the locomotive and the train was 79.6 per cent of their total weight of 525 tons and their length was 865 ft.

The Western Region (ramp operated type) A.W.S. Equipment

6. Locomotive No. D.1714, allocated to the London Midland Region, is one of a number fitted with the W.R. A.W.S. equipment in addition to the standard British Railways inductor operated A.W.S. equipment, owing to its travelling regularly over lines fitted with W.R. A.W.S. ramps. The W.R. A.W.S. equipment, when fitted on this class of locomotive, is attached to No. 2 traction motor casing by means of a bracket. On locomotive No. D.1714 and the majority of locomotives of the class this is a Mark II bracket, which is secured to the traction motor casing by four high tensile bolts. A sketch showing the general arrangement of the equipment, including the shoe, the bracket and the motor casing is at Figure III at the end of the Report.

7. The Mark II bracket was developed after a number of the original Mark I brackets had become detached in 1964, and a further number had developed cracks in the welds. The fitting of the Mark II brackets to the Brush-Sulzer Type 4 locomotives in service was completed in 1965. It was found, however, that there was difficulty in obtaining an accurate interference fit on the spigot faces of the Mark II bracket because of slight variations in the spacing of the spigot registers in the motor casings, and it was necessary therefore to resort to selective fitting. In order to overcome this trouble on the later batches of this class of locomotive to be built, a completely new design of cast steel bracket was developed. A six-bolt fastening was adopted in order to provide greater rigidity than the Mark II brackets, in which a small number of bolts had fractured and which also had a tendency to "spring" between the spigots. At the same time the motor casing was redesigned with closely specified dimensions to eliminate the need for selective fitting. The replacing of Mark II brackets on the earlier locomotives by the new Mark III brackets was not considered justified, however, particularly as the latter had to be associated with the modified design of motor casing.

8. The four bolts securing the Mark II bracket are special 1 in. diameter B.S.W. high tensile steel "Unbrako" bolts, tightened to a torque of 400 lbs ft. A locking grub screw is tightened into the head of each "Unbrako" bolt and lock nuts are fitted on each grub screw. An extract from the Maintenance Circular issued by the Western Region, giving detailed instructions for the fitting of the Mark II brackets, will be found at Appendix A.

Damage to the Train

9. The bogies and under-floor equipment of the locomotive were extensively damaged owing both to the derailment of the rear bogie and also to the detached W.R. A.W.S. equipment, which struck the traction motors and punctured the main fuel tanks as the locomotive passed over it. Luckily no fire occurred despite the extensive leakage of diesel oil.

10. The bogies, brake rigging and other under-floor equipment of the leading four coaches were extensively damaged and the body work also suffered considerably, particularly on the fourth coach which turned over onto its side. The other coaches in the train were also damaged, but the amount of damage, both to under-floor equipment and body work, became progressively less on coaches towards the rear of the train.

Damage to the track and signalling equipment

11. Some 325 yards of track on the Down Main line, including facing points No. 13, and 350 yards on the Up Relief line, including facing points No. 16, were destroyed or damaged so severely that they had to be replaced. The associated signalling equipment was also extensively damaged. On the approach to the point of derailment, the A.W.S. ramp for Small Heath South Down Main Distant signal was severely scored.

The Course of the Derailment

12. On approaching Tyseley, the bracket securing the W.R. A.W.S. equipment, which was in advance of the No. 2 motor and axle in the direction of travel, evidently became sufficiently loose to cause the leading bottom edge of the equipment to scrape the tops of rails of two diamond crossings in the centre of the "four foot" of the Down Main line, and then to scrape the surface of the timber barrow crossing at the London end of the station. The leading edge of the equipment then struck the London end of the A.W.S. ramp for Small Heath South Down Main Distant signal, scoring it deeply until the W.R. A.W.S. shoe, located some 20 ins in the rear of the leading edge of the equipment, commenced to ride up the ramp, lifting the equipment clear of it. As the shoe cleared the Birmingham end of the ramp, which, as shown in Figure I, is only 14 ft 1 in.

from the stretcher bar of No. 13 facing points, the equipment dropped again and struck the ramp of the facing point lock cover. It ripped the cover up, destroyed the facing point lock and struck the stretcher bar so severely that it bent towards the heel of the turnout, pulling the closed and clamped switch blade away from the stock rail, so that there was a gap of some 2 ins. at the tip of the switch blade.

13. The wheels of the rear bogie of the locomotive and of the bogies of all 12 coaches then passed between both switches and stock rails and derailment occurred as the gauge widened, the wheels dropping down onto the sleepers and subsequently striking further points and crossings, with the result that the coaches were straddled across the Down Main line in zig-zag fashion, with the fourth coach, a corridor composite, turning onto its right-hand or non-corridor side.

EVIDENCE

Traffic Staff

14. *Driver E.J. Davies* worked locomotive D.1714 from Birmingham to Reading on the 09.40 Birmingham (New Street) to Poole, returning again with the same locomotive on the 09.40 Poole to Newcastle express passenger train. He said that both journeys were normal in every way, with the W.R. A.W.S. equipment giving correct indications throughout, until he passed over No. 13 facing points on approaching Tyseley North Signalbox on the return journey at a speed of approximately 65 m.p.h. At this point there was a "terrific bang" and the locomotive seemed to lift. He immediately made a full application of the brakes and the locomotive came to rest with its rear slewed towards the Up Relief line. On seeing that the train was derailed, his second man and a driver who was learning the route went forward to carry out the necessary protection, while he went back to assist the injured passengers.

15. Davies affirmed that at no time during the outward or return journey did he isolate the W.R. A.W.S., nor did he get any false signals from the equipment when he was not passing over A.W.S. ramps.

16. *Second Man J.A. Cheadle* confirmed his driver's evidence. The first thing that he noticed was when the locomotive lurched as if it were going over a bad piece of track. By the time they came to a stand it was obvious that they were derailed and, having pressed the emergency switch to extinguish the train heating boiler, he immediately went forward to protect the opposite lines, after which he proceeded to Small Heath South Signalbox, where he asked the signalman to call out the emergency services.

17. *Driver C.J. Dutton* was also in the cab of the locomotive, learning the route between Birmingham and Oxford. He too confirmed Davies' evidence. On jumping down from the locomotive he saw that the derailed coaches were fouling the Up Relief line and he immediately waved his hands to stop a diesel multiple-unit passenger train which was approaching on that line. The driver blew his horn to acknowledge the hand signal and came to a halt about 100 yards from the locomotive. After assisting with the protection, Dutton went back along the train to help the passengers.

18. As he travelled in the rear coach, the first indication that *Passenger Guard F. Sommers* had that anything was wrong was when he felt two jolts, after which he was thrown to the floor in the parcels section of the brake van. He immediately went back to carry out protection.

19. *Driver R.E. Allen* was driving the 14.35 Birmingham Moor Street–Stratford-upon-Avon diesel multiple-unit passenger train on the Up Relief line, passing Small Heath South Signalbox at about 40 m.p.h., when he first saw the accident about half a mile ahead of him. He immediately applied his brakes and stopped about 100 yards from the head of the derailed train. On approaching the train, he noticed one of the train crew waving him to stop and he acknowledged the signal.

20. *Signalman D.R.S. Taylor* was on Duty at Small Heath South Signalbox at the time of the accident. He received the "Train Entering Section" signals for the Poole–Newcastle and Birmingham, Moor Street–Stratford-upon-Avon trains almost simultaneously at 14.38. He saw the latter train come to a stand on the Up Relief line, and then noticed that the locomotive of the former train looked as if it were blocking both the Up Relief and Up Main lines, whereupon he sent the "Obstruction Danger" signal to Tyseley South and Small Heath North Signalboxes. He telephoned Tyseley Exchange at 14.44 and requested that the emergency services be alerted.

Permanent Way and Signal and Telecommunications Staff

21. *Acting Ganger C. Appugliese*,who had been the acting ganger of the Tyseley length gang for approximately three years, said that he had examined the Down Main line, including Tyseley North facing points No. 13, on Monday 22nd May. The facing points were in good condition and were clamped for the Down Main line, with the switch blade fitting right up against the stock rail. The clamping arrangements included a locked clamp on the left-hand stock rail and switch, two fishplates screwed to the sleepers with their ends forcing the switch blade against the stock rail and a block of wood between the right-hand switch blade and stock rail to keep it open. The facing point lock equipment and the stretcher bars were all in good order.

22. *Inspector J.E. Quarterman*, the Signal and Telecommunications Inspector temporarily in charge of the area in which the accident occurred, was travelling in the diesel multiple-unit train which stopped short of the derailed train. On seeing the accident, he immediately jumped down from the train, and after alerting his staff and the Divisional office by telephone, he went to the scene of the accident. He examined No. 13 facing points and found them damaged, as described in paragraph 12. He saw that the flanges of the left-hand wheels of the train had passed cleanly between the switch blade and the stock rail, without even striking the

switch blade. The A.W.S. ramp for Small Heath South Distant signal, which was immediately on the London side of the facing points, had been struck severely on its leading edge—it looked as though some object had dug into it.

23. Inspector Quarterman subsequently gauged the A.W.S. ramps on the Down Main line at Tyseley North and Small Heath South; the maximum height of the former, which was not marked, was 3½ ins. above rail level, the maximum height allowed for A.W.S. ramps, and the maximum height of the latter was 3⅜ ins. above rail level. He also examined all other equipment in the "four foot" of the Down Main line between these points and found that the barrow crossing at Tyseley Station had been slightly scored by some object about 6 or 7 ins. wide, and there were also marks on the heads of the rail of the two diamond crossings on the London side of Tyseley Station in the "four foot" of the Down Main line.

Mechanical and Electrical Engineering Staff

24. *Mr. B.G. Sephton, Mechanical and Electrical Engineer (Locomotive), London Midland Region,* explained that the portions of the maintenance schedules laid down by the British Railways Board for the Brush-Sulzer Type 4 diesel-electric locomotive covering the W.R. A.W.S. equipment were as follows:—

(a) *32/38 hour and 150/180 hour examinations*

"A general visual examination to be made of the outside of the locomotive for the detection of loose, detached or leaking parts."

(b) *500/600 hour examination*

"Examine all components, pipes, cables, terminals and couplings for condition and security. Check that the Western Region shoe slipper piece is set to the correct height of 2½ ins. above the rail level. The height above rail level must be measured to the unworn portion of the shoe slipper piece. Change when this is worn down ¼ in."

25. These schedules had been augmented by additional instructions issued by the Chief Mechanical and Electrical Engineer, London Midland Region, to all motive power depots as follows:—

(a) On 3rd November 1965, following an incident where an A.W.S. shoe and fixing bracket had become detached and caused damage to the locomotive and coaches:—

(i) "Special attention to be paid to the Western Region A.W.S. shoe bracket when carrying out Item 1 of M.P.11D at 24/32 engine hours examination." (Examination subsequently altered to 32/38 hours.)

(ii) "In cases where A.W.S. 'drop-outs' are reported by drivers, the locomotive must be stopped and the fixing of the A.W.S. shoe bracket specially examined. Should the bracket be found loose it must be carefully examined for fractures and, if satisfactory, refitted."

Note:—The term "drop-out" is used to indicate the sounding of the W.R. A.W.S. horn when the locomotive is not passing over a ramp.

In addition, drivers were specially instructed to report "drop-out" immediately they occurred.

(b) On 14th April 1967, following the discovery of a loose W.R. A.W.S. shoe bracket by the Western Region, the attention of all concerned was again drawn to the importance of checking the security of the assembly as laid down in the relevant section of M.P.11D.

26. Subsequent to the accident at Tyseley, Mr. Sephton had issued an instruction calling for a special examination of the W.R. A.W.S. brackets and the fixing thereof. A copy of this instruction will be found at Appendix B.

27. *Mr. P.R. Wainright, Divisional Locomotive Engineer, Birmingham Division, London Midland Region,* gave details of the recent history of locomotive D.1714 as far as the W.R. A.W.S. equipment was concerned. Whilst the locomotive had been stopped at Tyseley Motive Power Depot during the latter part of March this year for examination and repair, a new traction motor had been fitted to No. 2 axle. This had entailed removing the W.R A.W.S. Mark II support bracket, shoe casting and shoe, and refitting them to the new traction motor. The locomotive had been returned to service on 31st March.

28. Mr. Wainright then quoted a total of ten extracts from the repair book, carried in the driver's cab of the locomotive, dealing with the B.R./W.R. A.W.S. equipment on the locomotive during the period 8th April–20th May. He agreed that the number of incidents was slightly higher than usual, but they appeared to be minor in character, and he did not consider that any of them were relevant to the accident.

29. *Mr. A.S. Nicholson, Mechanical Foreman, Tyseley,* said that, although he did not personally supervise the fitting of the new No. 2 traction motor and the refitting of the W.R. A.W.S. equipment of locomotive D.1714 in March, he had inspected the work at intervals. The W.R. A.W.S. equipment, the Mark II bracket and the bolts that were fitted had all been transferred from the old traction motor, and so it was possible that the bolts had been in service since the bracket was originally fitted. He explained in detail the method employed in fitting the Mark II support bracket to the traction motor casing and the calibration of the torque wrench used to tighten the 4 "Unbrako" bolts to ensure it "broke" at 400 lbs ft. He was quite satisfied that the bolts had been fitted correctly on this occasion.

30. Mr. Nicholson had also examined the locomotive when it was brought into Tyseley Motive Power Depot after the derailment, and found that all 4 "Unbrako" bolts were broken off flush with the motor casing. The top right-hand bolt, looking from the front of the locomotive, appeared to have been broken for some

time, but the other three fractures appeared to be new. Although there was some bruising on the lower part of the bottom two mounting pads, there was no indication that the bracket had been working on its mountings prior to the accident.

31. *Fitter J.A. Thomas* had carried out the whole of the fitting of No. 2 traction motor to the locomotive at Tyseley in March this year. He said that after completing this, he had tested the "Unbrako" bolts, that had been used previously to secure the Mark II A.W.S. support bracket to the old traction motor, for cracks, first cleaning them, and then putting on penetrating fluid and developer. No cracks had been apparent in any of the bolts and he had then run them into the bolt holes in the motor housing to ensure that there was adequate clearance between the ends of the bolts and the bottoms of the bolt holes when the support bracket was fitted. After checking that the distances from the bolt heads to the motor casing were correct, he removed the bolts and refitted the support bracket with a crane and put it in the correct position on the lugs, then refitting the bolts hand tight.

32. Thomas then calibrated a torque wrench against a master gauge so that it "broke" at 400 lbs ft, after which he "torqued up" each of the 4 "Unbrako" bolts, fitted the $\frac{3}{8}$ in. diameter Allen grub screws which lock the main bolts and finally fitted the lock nuts to the Allen screws. Thomas was sure that all 4 main "Unbrako" bolts had been "torqued up" correctly to 400 lbs ft, and that the fitting of the support bracket to the motor casing was entirely satisfactory.

33. *Fitter D.G. Taylor, of Oxley Motive Power Depot*, had carried out the mechanical part of a 150 hour examination to the locomotive on 14th May. This had included the visual examination of the W.R. A.W.S. equipment and support bracket, but in addition he said that he always tapped the bolts with a small hammer and checked the carrier nuts with an adjustable spanner. The support bracket bolts sounded as if they were all tight and all the lock nuts were in position. Taylor considered that if the bracket had been loose he would definitely have noticed it.

34. *Fitter N.L. Nelmes* had carried out the 32/38 hour examination on the locomotive at Tyseley during the night of 19th/20th May. He had visually examined the W.R. A.W.S. equipment and had then put his shoulder under it to check if there was any movement in the bracket, but everything appeared to be secure. The only thing that was wrong with the equipment was that the slipper and its carrier were missing, which he had reported to his foreman.

35. *Fitter A. Wootton* had replaced the W.R. A.W.S. carrier and slipper on 20th May. After fitting the slipper, he had gauged its height and adjusted it to the correct height of $2\frac{1}{2}$ ins. above rail level. There was no indication, such as the distortion of the bolt holes, to show that the slipper or carrier had struck anything, and Wootton considered they had probably just dropped off, which did sometimes occur with this equipment. He had given the W.R. A.W.S. equipment and support bracket a general examination after fitting the carrier and slipper, and everything had appeared to be properly secured. There was no indication of any movement of the support bracket relative to the traction motor casing.

Review of the W.R. A.W.S. Mark II Support Bracket Securing Bolts

36. The four fractured "Unbrako" bolts from locomotive D.1714 were examined by the Engineering Division of the British Railways Research Department. The initial examination confirmed that high stress fatigue failures had occurred in each of the four bolts. The top right-hand bolt had been broken for some time before the incident, as shown by the corroded fractured surface, whilst the other three failures were more recent, no corrosion products being visible.

37. Subsequently a further and more detailed examination was carried out by the Research Department into two of the four failed bolts from locomotive D.1714 and twelve unbroken bolts from W.R. A.W.S. Mark II support brackets of three other locomotives of the same class; in addition the principle of using high tensile bolts in this type of application was investigated. Hardness tests and metallographic examination on the two failed bolts indicated that the material in both bolts was satisfactory and conformed to the manufacturer's specification. Hardness values indicated an equivalent tensile strength of 85–90 tons/sq. in. No cracks were detected at any of the thread roots of the twelve unbroken bolts.

38. It was noted that the torque applied in tightening these bolts was not in accordance with the manufacturer's recommendation, which is that a tightening torque of 758 lbs ft should be applied. The preload in the bolt developed by this torque is required to produce the maximum resistance to fatigue loading. A torque of 400 lbs ft, as at present used when securing the W.R. A.W.S. Mark II support brackets, is considered by the Research Department inadequate for maximum life expectation of the bolts.

39. The Research Department, following their more detailed examination, including the use of high tensile bolts in this type of application, recommended:—

(a) "The use of the manufacturer's maximum tightening torque (and hence the maximum bolt preload) is essential to achieve the longest life under fatigue loading conditions, and it is recommended that a trial be made to ascertain whether or not this torque, stipulated by the manufacturers, and the equivalent maximum bolt preload can be obtained in practice. The use of a reduced torque value must of necessity produce a shorter service life."

(b) "The bracket design should be re-examined to see if much longer bolts, storing a greater amount of strain energy and having a greater inherent resistance to fatigue loading, could be employed."

Conclusions

40. This accident was caused by the heavy W.R. A.W.S. equipment and its Mark II support bracket falling from locomotive D.1714 and striking Tyseley North No. 13 facing points equipment in such a manner that the clamped and padlocked left-hand switch blade was forced open, with the result that the flanges of the left-hand wheels of the rear bogie of the locomotive and of all 12 coaches passed between the switch blade and the stock rail, leading to the complete derailment of the train behind the front bogie of the locomotive. I am satisfied that the facing point lock equipment of No. 13 facing points was in good order, although it had been out of use since 9th January 1966, and that the left-hand switch blade, prior to the accident, was fitting closely against the stock rail.

41. There is little doubt that the top right-hand bolt securing the Mark II W.R. A.W.S. support bracket had failed some considerable time before the accident and that this resulted in excessive fatigue loading on the remaining three bolts. On approaching Tyseley the top left-hand bolt almost certainly failed from fatigue and the W.R. A.W.S. equipment, cantilevered forward from the support bracket, commenced to drop down, the leading bottom edge scraping the heads of the rails of the two diamond crossings in the "four foot" of the Down Main line south of Tyseley Station, then scraping the timber barrow crossing at the south end of the station, and finally striking and digging into the south end of the A.W.S. ramp for Small Heath South Down Main Distant signal. This probably completed the fracture of the two bottom bolts, the equipment then being carried along the ramp by the A.W.S. shoe and finally falling and striking the facing point lock and stretcher bars of No. 13 facing points, the blow being particularly severe due to the equipment being jammed between the facing point lock equipment and the casing of No. 2 traction motor.

42. I do not consider that the fitters who examined the W.R. A.W.S. equipment on locomotive D.1714 on the 14th, 19th and 20th May could have discovered the failure of the top right-hand bolt securing the support bracket to the motor casing, unless they had loosened the grub screws locking the bolts and actually tested their tightness. This they were not required to do.

43. I accept that Fitter Thomas fitted the W.R. A.W.S. equipment correctly to the new No. 2 motor during the latter part of March and that he tested the four bolts for fatigue cracks to the best of his ability with the equipment available. It seems likely, however, that a fatigue flaw existed in the bolt which was subsequently placed in the top right-hand position of the bracket, but was not discovered. This then grew until a complete bolt failure occurred soon after the locomotive returned to service.

Remarks and Recommendations

44. Following the accident and as a short term measure, the Chief Mechanical and Electrical Engineers of both the London Midland and Western Regions immediately made arrangements for the examination of all the "Unbrako" bolts securing Mark II W.R. A.W.S. support brackets to the Brush-Sulzer Type 4 locomotives allocated to their Regions. As a further immediate precaution, the Chief Engineer (Traction and Rolling Stock), British Railways Board, issued instructions that the "Unbrako" bolts securing the brackets on all these locomotives were to be replaced by new bolts of similar design as a matter of urgency, and I understand that this has now been completed.

45. This should secure the immediate situation and prevent any early recurrence of a serious accident of this type. But a long term solution must be found, and the following seem to be possibilities:—

(i) The replacement of the bolts securing all W.R. A.W.S. brackets at regular intervals, say every 3,000 hours, which should ensure that their fatigue life does not expire.

(ii) An increase in fatigue life of the bolts by increasing the tightening torque of the "Unbrako" bolts in the Mark II brackets to the figure of 758 lbs ft, as recommended by the bolt manufacturers and the British Railways Research Department. This would increase the fatigue life at least four fold, and reduce the frequency of replacement of the bolts. (See paragraphs 38 and 39.)

(iii) The initiation of an immediate programme to replace all four bolt Mark II brackets by six bolt Mark III brackets.

(iv) Where Brush-Sulzer Type 4 locomotives are required to be dual fitted with B.R. and W.R. A.W.S. for working on former G.W.R. lines, the locomotives used, where possible, should be those with the latest design of traction motor casing which will accept the Mark III W.R. A.W.S. support bracket.

46. I am glad to report that, following discussion with the Board's Officers concerned, consideration is being given to a solution including both (ii) and (iii) above. Namely, to increase the "torqueing up" of the bolts from 400 lbs ft to 758 lbs ft as soon as possible, and then to fit the six bolt Mark III brackets as a modification to the locomotives during normal Main Works shopping.

I have the honour to be,

Sir,

Your obedient Servant,

P. M. Olver

Major.

The Secretary

Ministry of Transport.

BRITISH RAILWAYS WESTERN REGION MAINTENANCE CIRCULAR NO. ME 6/W/100 DATED 8TH MARCH 1965.

Brush Type 4 D.E. Locomotives—Fitting of Mark II A.W.S. Brackets

To ensure the correct fitting of the above type A.W.S. brackets the following instructions must be carried out:—

Preparing Traction Motor

No. 2 traction motor pads to be filed flat and the lands to be cleaned of all paint and burrs.

Using gauge supplied together with feeler gauges, check measurement between the lands of the traction motor and record.

Readings should be 10·250 ± 0·002 in.

Lubricate the threads of the "Unbrako" bolts with Moly Disulphide Grease, run the bolts fully home by hand and check the measurement between the traction motor pads and the underside of the head of the "Unbrako" bolts. Measurement not to exceed $\frac{5}{8}$ in.

Preparing A.W.S. Bracket

Clean any burrs or paint from the mating faces and spigots of the A.W.S. bracket.

Measure distance across spigots and record. If measurement is such that it is not possible to get a 0·002 in. minimum interference fit, bracket must not be fitted.

Normal measurements for A.W.S. brackets are from 10·255–10·260 ins. Check that the $\frac{3}{8}$ in. B.S.F. grub screws are free in their threads, if not tap out holes. Also check that the three $\frac{5}{8}$ in. Whit. holes for the conduit bracket are tapped out.

Fitting Bracket

Ensure that all mating faces are clean, lightly smear the lands and spigots with Moly Disulphide Grease.

Offer the bracket up in position and line up the holes, enter bolt and pull bracket home by using extension bar and small spanner with a leverage of not more than 6–8 ins. and nip the bracket up.

Before using torque spanner check that it is not possible to get a 0·002 in. feeler between the four mating faces. (This is a good indication that the bracket has been pulled up square and that the traction motor pads have been filed flat).

Torque load the bolts to 400 lbs ft and again check that it is not possible to get a 0·002 in. feeler between the faces. If it is possible, bracket to be removed and pads refiled.

Tighten the four $\frac{3}{8}$ in. B.S.F. grub screws and lock with nut.

INSTRUCTION ISSUED BY CHIEF MECHANICAL AND ELECTRICAL ENGINEER, LONDON MIDLAND REGION, TO DIVISIONAL MANAGERS ON 25TH MAY 1967

Automatic Warning System of Train Control

Dual B.R./W.R. A.W.S.—W.R. Shoe and Bracket

Will you please arrange for an immediate check to be made of the W.R. Shoe and Bracket assembly on all locomotives equipped with the Dual B.R./W.R. Automatic Warning System. This check must be carried out in the following manner.

1. Visually examine bracket for signs of movement or fractures.
2. Slacken nuts on locking grub screws. Release each grub screw at least three turns to ensure screw is well clear of "Unbrako" bolt head. Remove "Unbrako" bolts one at a time and thoroughly examine for fractures or other defects. Where any doubt exists as to the condition of the bolts they must be renewed. Refit bolts and tighten to 400 lbs ft torque. Tighten down each locking grub screw using small extension tube on spanner or key to ensure that the grub screw is sufficiently tightened into the head of the "Unbrako" bolt. Tighten lock nuts on each locking grub screw.

For your information the following locomotives allocated to the London Midland Region are equipped with the W.R. Shoe and Bracket:—

D.1682–D.1701; D.1707–D.1729; D.1939–D.1967

Please advise this office when this special examination has been completed.

Note:—It is most important that the "Unbrako" bolts should be capable of being run fully home by hand and under these conditions the measurement between the underside of the head of the bolt and the traction motor pad must not exceed $\frac{5}{8}$ in. Where the condition of the bolts is being checked with the bracket in position it is not possible to check this dimension but it is important to establish in this case that the bolts can be run in by hand until the head contacts the bracket and does not bottom in the hole when tightened to the required torque loading.

(97081) Dd. 138257 K9 2/68 Hw.

DERAILMENT OF 09.40 POOLE-NEWCASTLE EXPRESS

AT TYSELEY, LONDON MIDLAND REGION – 22nd MAY, 1967

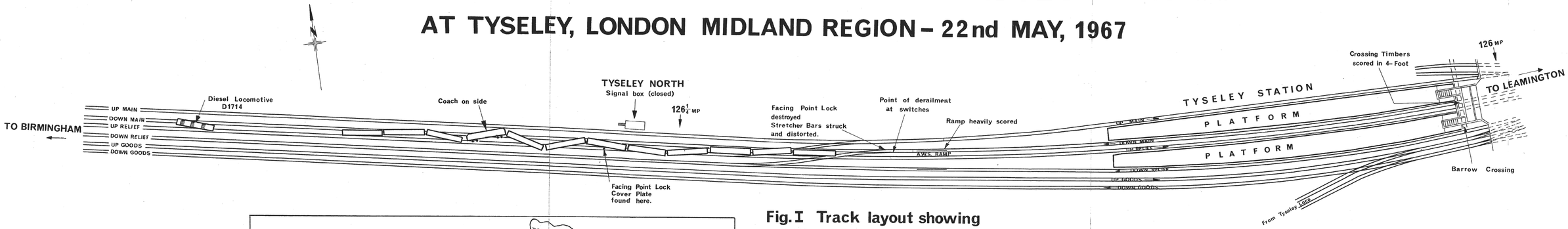

Fig. I Track layout showing positions in which coaches came to rest

SCALE: 66 FT. to 1 INCH

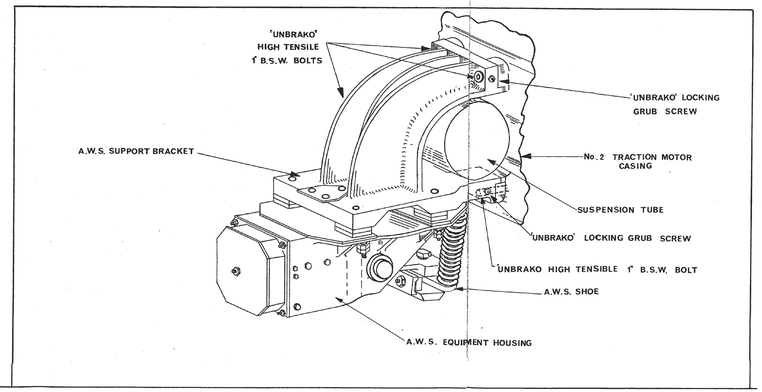

Fig. III Sketch showing general arrangement of Mark II Western Region A.W.S. Support Bracket fitted on Brush–Sulzer Type 4 locomotives.

Fig. II Location Diagram
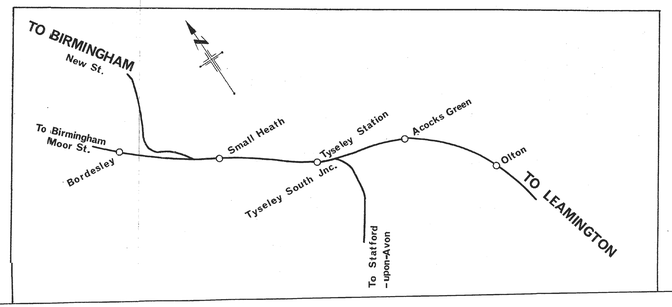
SCALE: 1½ IN. to 1 MILE